6 Optimally solving the Shortest Path Problem

- In what follows, we apply specific variants of the Primal-Dual Algorithm in order to derive new algorithms for the Shortest Path (Section 6) and for the Max-Flow Problem (Section 7)
- We commence our study with the Shortest Path Problem
- In the literature, two main types of shortest path problems are distinguished
  - The **single source shortest path problem**

    Find the shortest path from one distinguished node to all other nodes in the network
  - The **all pairs shortest path problem**

    Find the shortest path between all pairs of nodes in the network

Overview of the Section

- The **single source shortest path problem**
  - In Section 6.1, we will derive the famous Dijkstra algorithm as a special extended Primal Dual procedure
  - However, this procedure is not able to handle negative weights
  - Therefore, in Section 6.2, we consider the Bellman-Ford algorithm
- The **all pairs shortest path problem**
  - In Section 6.3, we finally introduce the Floyd Warshall procedure that is also able to deal with negative arc weights
  - It is also able to identify cycles of negative length

6.1 Deriving the Dijkstra algorithm

First of all, we have to introduce the problem of finding the shortest path from a distinguished node to all other nodes in a network

- In what follows, we consider directed weighted graphs
- In order to provide a complete LP-based problem definition of this Shortest Path Problem, we introduce several basic notations

Graph, Network, …

6.1.1 Definition

Assuming V is a finite set, in what follows, defined as

$V = \{1,..,n\}, n \in IN,$

$E = \{e_1,...,e_m\} \subseteq (V \times V) \setminus D, D = \{(v,v) \mid v \in V\}$, and $c : E \to IR.$

Then, $N = (V, E, c)$ is denoted as a weighted directed graph (also denoted as a network). V is denoted as the vertices (nodes) and E the set of arcs. $c(e)$ indicates the weight (length, costs) of the arc $e \in E$.

A simple example

$$V = \{1,2,3,4,5,6\}, E = \{(1,2),(1,3),(2,3),(2,4),(2,5),(3,5),(5,4),(4,6),(5,6)\},$$

$$c = (2,1,3,3,1,1,2,2,5)^T \quad \left(c \in IR^9, c_j = c(e_j)\right)$$

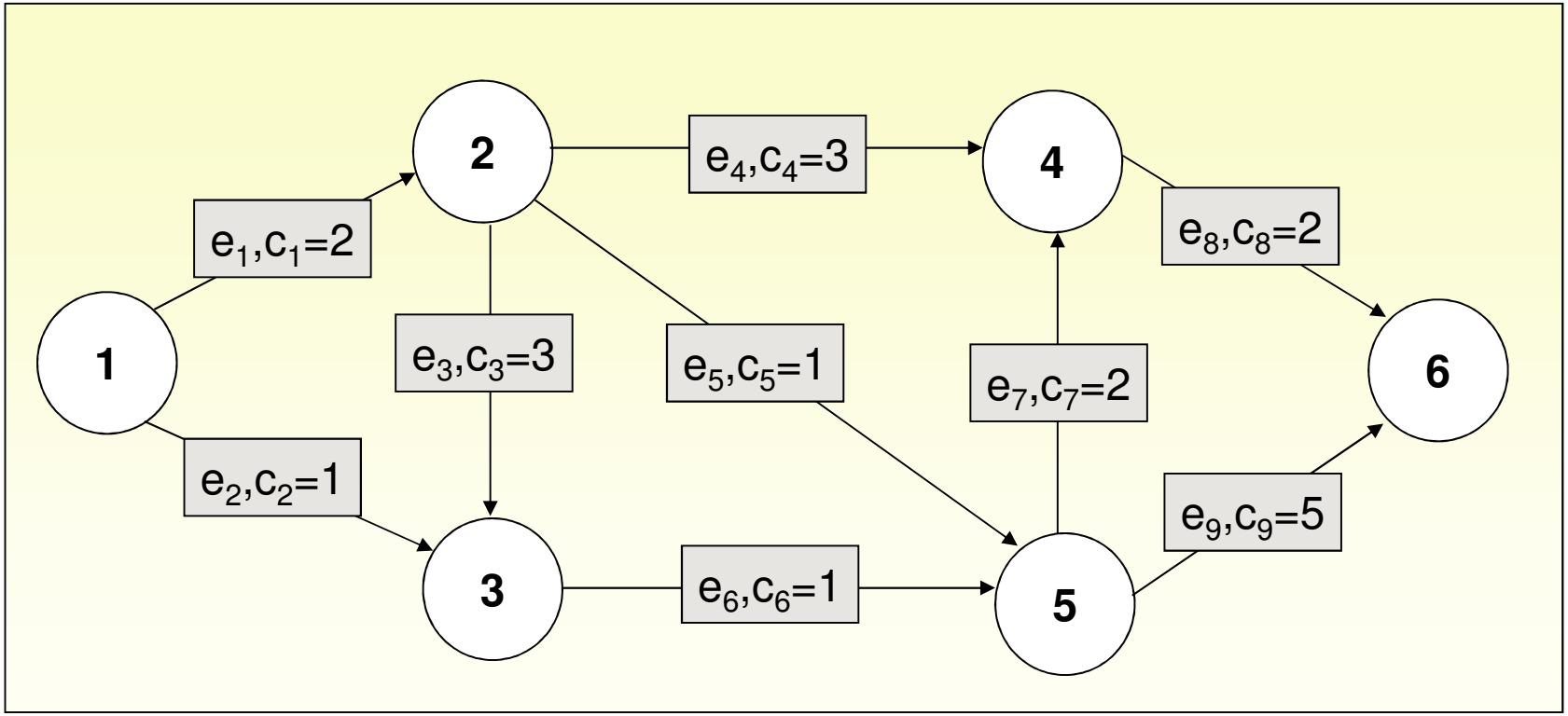

Adjacency lists

- In general: v: w_1, $c(v,w_1)$

- 1: 2,2; 3,1
- 2: 3,3; 4,3; 5,1
- 3: 5,1
- 4: 6,2
- 5: 4,2; 6,5
- 6: -

Vertex-arc adjacency matrix

$$\tilde{A} = \left(\alpha_{i,k}\right)_{1\le i\le n;1\le k\le m}, \text{with } \tilde{\alpha}_{i,k} = \begin{cases} +1 \text{ when } \exists j \in V : e_k = (i,j) \\ -1 \text{ when } \exists j \in V : e_k = (j,i) \\ 0 \text{ otherwise} \end{cases}$$

$\tilde{\alpha}_{i,k} = 1 \Rightarrow i$ is source of arc e_k; $\tilde{\alpha}_{i,k} = -1 \Rightarrow i$ is sink of arc e_k

$e_k = (i,j) \Rightarrow \tilde{\alpha}^k = e^i - e^j$, with e^i as the ith unit vector

$$\Rightarrow \tilde{A} = \begin{pmatrix} 1 & 1 & 0 & 0 & 0 & 0 & 0 & 0 & 0 \\ -1 & 0 & 1 & 1 & 1 & 0 & 0 & 0 & 0 \\ 0 & -1 & -1 & 0 & 0 & 1 & 0 & 0 & 0 \\ 0 & 0 & 0 & -1 & 0 & 0 & -1 & 1 & 0 \\ 0 & 0 & 0 & 0 & -1 & -1 & 1 & 0 & 1 \\ 0 & 0 & 0 & 0 & 0 & 0 & 0 & -1 & -1 \end{pmatrix}$$

Path

6.1.2 Definition

Assuming $N = (V, E, c)$ is a weighted directed graph (also denoted as a network). Then, a path leading from $i_0 \in V$ to $i_k \in V$ is a sequence of nodes $\langle i_0, i_1, i_2, ..., i_k \rangle$, with $e_{l_t} = (i_t, i_{t+1})$, $k - 1 \geq t \geq 0$.

The length (weight, costs) of the path is calculated by

$$c(\langle i_0, i_1, i_2, ..., i_k \rangle) = \sum_{t=0}^{k-1} c(e_{l_t}) = \sum_{t=0}^{k-1} c(i_t, i_{t+1}).$$

If $i_k = i_0$, the path $\langle i_0, i_1, i_2, ..., i_k \rangle$ is denoted as a cycle

Definition of variable *x*

Assuming $p = \langle i_0, i_1, i_2, ..., i_k \rangle$ is a path in a network N. Then, we define $x \in IR^m$ as follows

$$x_i = \begin{cases} 1 \text{ if } e_i = (i_l, i_{l+1}), l \in \{0,1,2,...,k-1\} \\ 0 \qquad\qquad\qquad\qquad \text{otherwise} \end{cases}$$

Then, we obtain

$$\tilde{A} \cdot x = \sum_{t=0}^{k-1} \alpha^{l_t} = \sum_{t=0}^{k-1} \left(e^{i_t} - e^{i_{t+1}} \right) = e^{i_0} - e^{i_k}$$

If p is cyclic, we have $\tilde{A} \cdot x = e^{i_0} - e^{i_k} = e^{i_0} - e^{i_0} = 0$

Consequences

The other way round

$\tilde{A} \cdot x = 0 \Rightarrow x$ defines a sequence of cycles in N

$\tilde{A} \cdot x = e^i - e^j$ defines a path from i to j (may be combined with a sequence of cycles)

In what follows, we assume that $c_i > 0, \forall i \in \{1,...,m\}$

The Shortest Path Problem

- Generate a path from i to j

Minimize $c^T \cdot x$

s.t.

$$\tilde{A} \cdot x = e^i - e^j \wedge x \in IN_0^m \overset{!}{\Rightarrow} x \in \{0,1\}^m$$

Since we minimize the total flow, this problem is equivalent to restricting the variable vector x to $\{0,1\}^m$.

Observation

- By adding all rows of the matrix, we obtain the null vector
- This results from the fact that each column represents an arc with a definitely defined **source** and **sink** (represented by the entries 1 and -1)
- Consequently, m-1 is an upper bound of the rank of the matrix
- We denote A as the resulting matrix that arises by erasing the last row in $\tilde{A}$
- Hence, in what follows, we consider the following general Shortest Path Problem

The Shortest Path Problem

- Generate a path from 1 to destination n

$$\text{Minimize } c^T \cdot x$$

$$\text{s.t.}$$

$$A \cdot x = e^1 \wedge x \in \{0,1\}^m$$

Then, we get the corresponding dual problem

$$\text{Maximize } \left(e^1\right)^T \cdot \pi = \pi_1,$$

$$\text{s.t., } A^T \cdot \pi \le c \Leftrightarrow \pi_i - \pi_j \le c(i,j), \forall e_k = (i,j) \in E$$

$$\pi \text{ free}$$

- Note that in the section named “Integer Programming” we will see that this problem is equivalent to its LP-relaxation (switching back to continuous variables)

The RP and its dual counterpart

Based on a dual solution π and the resulting sets J and J^c,

we define the reduced problem $\mathrm{RP}(\pi)$ as follows:

$$\text{Minimize } \sum_{j=1}^{n} x_j^a,$$

$$\text{s.t.,} \left(E_n, \left(a^j\right)_{j\in J}\right) \cdot \begin{pmatrix} \left(x_j^a\right)_{1\le j\le n} \\ \left(x_j\right)_{j\in J} \end{pmatrix} = e^1 \wedge x \in IN_0^m = \{0,1\}^m$$

Hence, we get the corresponding dual of the reduced problem $\mathrm{DRP}(\pi)$

$$\text{Maximize } \left(e^1\right)^T \cdot \pi = \pi_1,$$

$$\text{s.t., } \pi \le 1 \wedge \left(a^j \mid_{j\in J}\right)^T \cdot \pi \le 0 \Leftrightarrow \pi_i - \pi_j \le 0, \forall e_k = (i,j) \in E \wedge k \in J$$

π free

Solving DRP(π)

Hence, we get the corresponding dual of the reduced primal problem $\mathrm{DRP}(\pi)$

Maximize $\left(e^1\right)^T \cdot \pi = \pi_1,$

s.t., $\pi \leq 1^n \wedge \pi_i - \pi_j \leq 0, \forall e_k = (i,j) \in E \wedge k \in J$

Let us consider the problem $\mathrm{DRP}(\pi)$. In what follows, we denote a solution to $\mathrm{DRP}(\pi)$ as $\overline{\pi}$. Obviously, each feasible solution with $\overline{\pi}_1 = 1$ is optimal. Thus, we have to follow all paths generated by the edges of set J.

Solving DRP(π)

Hence, if node i is reachable from node 1, we define $\overline{\pi}_i = 1$. But, if we commence our examination at the destination n, we know that it holds $\overline{\pi}_i \leq 0, \forall\ i \in V$ with $(i,n) \in J$.

Note that this results from the fact that $\overline{\pi}_i - \overline{\pi}_n \leq 0$ has to be fulfilled and $\overline{\pi}_n$ was erased by replacing $\tilde{A}$ with A. Thus, we obtain $\overline{\pi}_i \leq 0$.

Solving DRP(π)

Obviously, in these constellations, we can set $\overline{\pi}_i = 0$. This value is also propagated along each path generated by arcs of set J. Consequently, we may conclude

$$\overline{\pi}_i = \begin{cases} 1 \text{ when there exists a path in } J \text{ from 1 to } i \\ 0 \text{ when there exists a path in } J \text{ from } i \text{ to } n \\ a \leq 1 \qquad\qquad\qquad\qquad \text{otherwise} \end{cases}$$

In what follows, we define $a = 1$ in order to distinguish two sets of nodes

$$W = \{i \mid i \in V \wedge \overline{\pi}_i = 0\} \wedge W^c = \{i \mid i \in V \wedge \overline{\pi}_i \neq 0\}.$$

Solving DRP(π)

$$W = \{i \mid i \in V \wedge \bar{\pi}_i = 0\} \wedge W^c = \{i \mid i \in V \wedge \bar{\pi}_i \neq 0\}.$$

In order to generate a shortest path from 1 to n,

in case $\bar{\pi}_1 = 1$, we have to add additional arcs $j \notin J$.

We know $\forall (i,j) \in E$, with $(i,j) \notin J : c_{i,j} - \pi_i + \pi_j > 0$

We consider those edges that have negative relative costs, i.e.,

it holds: $0 - \bar{\pi}_i + \bar{\pi}_j < 0 \Leftrightarrow \bar{\pi}_i - \bar{\pi}_j > 0 \Rightarrow \bar{\pi}_i = 1 \wedge \bar{\pi}_j = 0$

The Primal-Dual Simplex generates

$$\lambda_0 = \min \left\{ \frac{c_{i,j} - \pi_i + \pi_j}{\bar{\pi}_i - \bar{\pi}_j} \mid \forall (i,j) \in E \text{ with } (i,j) \notin J \right\}$$

$$= \min \left\{ c_{i,j} - \pi_i + \pi_j \mid \forall (i,j) \in E \text{ with } (i,j) \notin J \right\}$$

Observations

- $\mathrm{DRP}(\pi)$ determines a cut between the sets

  $W = \{i \mid i \in V \wedge \overline{\pi}_i = 0\} \wedge W^c = \{i \mid i \in V \wedge \overline{\pi}_i \neq 0\}$
- The considered edges with $\overline{\pi}_i = 1 \wedge \overline{\pi}_j = 0$ are just the edges that bridge the gap, i.e., they connect the incompleted path found to node n with the beginning of the graph
- π_i indicates the length of the shortest path from i to n, for $i \in W$. This is the invariante of the procedure
- $\min\{c_{i,j} - \pi_i + \pi_j \mid \forall (i,j) \in E, \text{ with } (i,j) \notin J\}$ gives the length of the shortest edge bridging the gap between W and W^c
- Specifically, for this edge it holds: $c_{i,j} - \pi_i + \pi_j = 0 \Leftrightarrow \pi_i = c_{i,j} + \pi_j$

Further observations

– If $(i, j) \in E$ has become admissable, it stays admissable for the remaining calculations, i.e., it holds $\pi_i - \pi_j = c_{i,j}$. This results from the fact that $\overline{\pi}_i = \overline{\pi}_j = 0$

– Consequently, we can conclude that if a node i has entered W, it stays there for the rest of the calculation process

Applying the Primal-Dual Simplex

- Consider the dual of the Shortest Path Problem
- Obviously, since $c \geq 0$, we know that $\pi = 0$ is a first feasible solution to *(D)*
- By making use of $\pi = 0$, we have an initial dual solution in order to commence the calculation of the Primal-Dual Simplex Algorithm

A simple example (warm up)

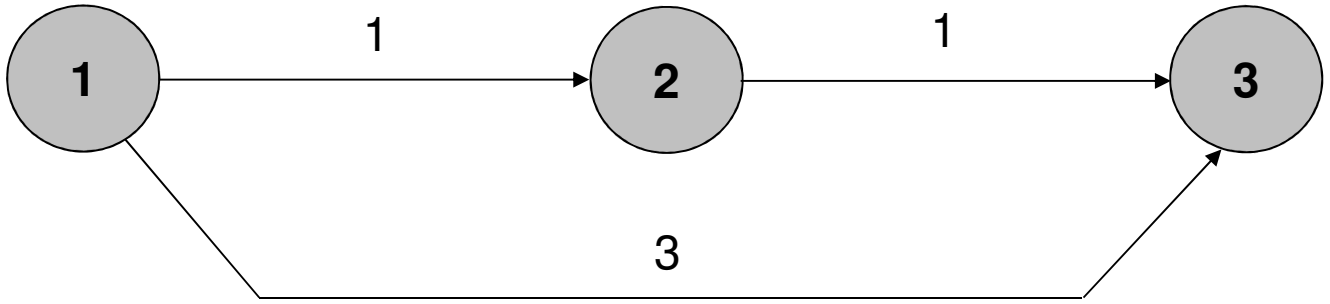

$$\Rightarrow (P)$$

Minimize $\quad c^T \cdot x = \begin{pmatrix} 1 & 3 & 1 \end{pmatrix} \cdot x,$

s.t.,

$$\left(\tilde{A} = \begin{pmatrix} 1 & 1 & 0 \\ -1 & 0 & 1 \\ 0 & -1 & -1 \end{pmatrix} \right) \Rightarrow A \cdot x = \begin{pmatrix} 1 & 1 & 0 \\ -1 & 0 & 1 \end{pmatrix} \cdot x = \begin{pmatrix} 1 \\ 0 \end{pmatrix}$$

A simple example (warm up)

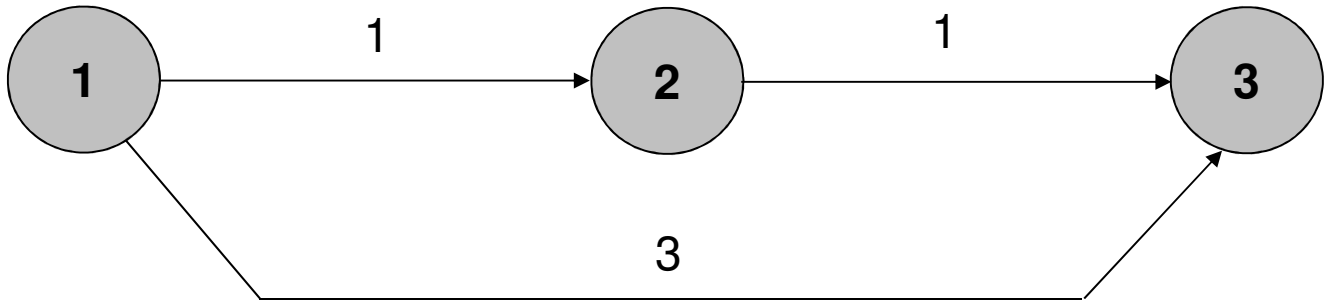

$$(D) \quad \text{Maximize } \pi_1, \text{ s.t.}, A^T \cdot \pi = \begin{pmatrix} 1 & -1 \\ 1 & 0 \\ 0 & 1 \end{pmatrix} \cdot \pi \leq c = \begin{pmatrix} 1 \\ 3 \\ 1 \end{pmatrix}$$

We additionally set $\pi_n = 0$

Applying the Primal-Dual Simplex

$$\text{We have } \pi = \begin{pmatrix} 0 \\ 0 \end{pmatrix} \Rightarrow \begin{pmatrix} 1 \\ 3 \\ 1 \end{pmatrix} - A^T \cdot \pi = \begin{pmatrix} 1 \\ 3 \\ 1 \end{pmatrix} - \begin{pmatrix} 1 & -1 \\ 1 & 0 \\ 0 & 1 \end{pmatrix} \cdot \begin{pmatrix} 0 \\ 0 \end{pmatrix}$$

$$= \begin{pmatrix} 1 \\ 3 \\ 1 \end{pmatrix} \Rightarrow J = \varnothing \wedge J^c = \{1,2,3\}$$

RP(π)

0	1	1	0	0	0
1	1	0	1	1	0
0	0	1	−1	0	1

$\Rightarrow$

−1	0	0	0	−1	−1
1	1	0	1	1	0
0	0	1	−1	0	1

$$\Rightarrow \begin{pmatrix}1\\1\end{pmatrix} - \bar{\pi} = \begin{pmatrix}0\\0\end{pmatrix} \Leftrightarrow \bar{\pi} = \begin{pmatrix}1\\1\end{pmatrix}, \lambda_0 = \min\left\{ \frac{c_2 - (0,0)\cdot\begin{pmatrix}1\\0\end{pmatrix}}{\bar{\pi}^T \cdot \begin{pmatrix}1\\0\end{pmatrix}}, \frac{c_3 - (0,0)\cdot\begin{pmatrix}0\\1\end{pmatrix}}{\bar{\pi}^T \cdot \begin{pmatrix}0\\1\end{pmatrix}} \right\}$$

$$= \min\left\{\frac{3}{1}, \frac{1}{1}\right\} = 1$$

Illustration of RP(π)

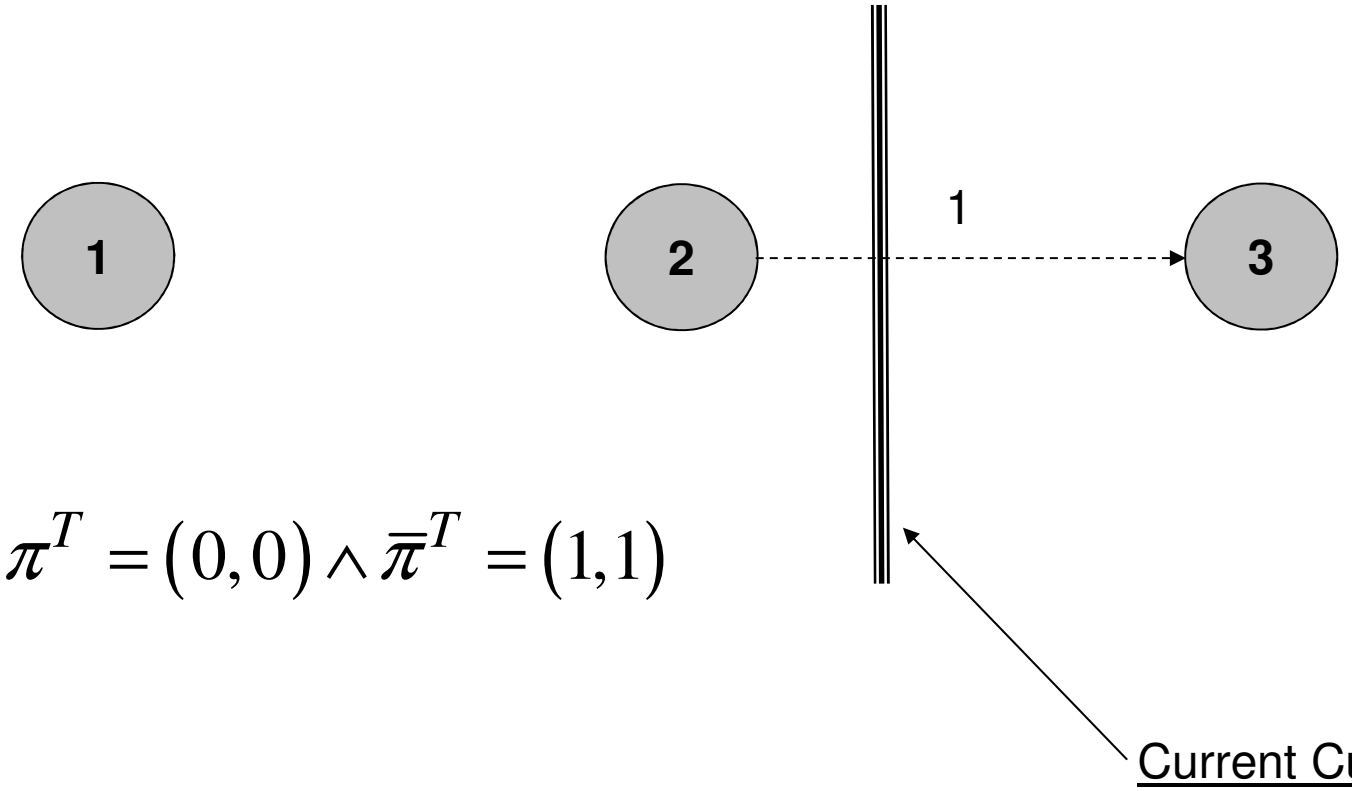

$$\pi^T = (0,0) \wedge \bar{\pi}^T = (1,1)$$

Updating π and J

$$\lambda_0 = 1 \Rightarrow \pi = \begin{pmatrix} 0 \\ 0 \end{pmatrix} + 1 \cdot \begin{pmatrix} 1 \\ 1 \end{pmatrix} = \begin{pmatrix} 1 \\ 1 \end{pmatrix}$$

$$\text{We have } \pi = \begin{pmatrix} 1 \\ 1 \end{pmatrix} \Rightarrow \begin{pmatrix} 1 \\ 3 \\ 1 \end{pmatrix} - A^T \cdot \pi = \begin{pmatrix} 1 \\ 3 \\ 1 \end{pmatrix} - \begin{pmatrix} 1 & -1 \\ 1 & 0 \\ 0 & 1 \end{pmatrix} \cdot \begin{pmatrix} 1 \\ 1 \end{pmatrix}$$

$$= \begin{pmatrix} 1-1+1 \\ 3-1 \\ 1-1 \end{pmatrix} = \begin{pmatrix} 1 \\ 2 \\ 0 \end{pmatrix} \Rightarrow J = \{3\} \wedge J^c = \{1,2\}$$

RP(π)

$$\begin{array}{c|ccccc} -1 & 0 & 0 & 0 & -1 & [-1] \\ \hline 1 & 1 & 0 & 1 & 1 & 0 \\ 0 & 0 & 1 & -1 & 0 & (1) \end{array} \Rightarrow \begin{array}{c|ccccc} -1 & 0 & 1 & -1 & -1 & 0 \\ \hline 1 & 1 & 0 & 1 & 1 & 0 \\ 0 & 0 & 1 & -1 & 0 & 1 \end{array}$$

$$\Rightarrow \begin{pmatrix} 1 \\ 1 \end{pmatrix} - \bar{\pi} = \begin{pmatrix} 0 \\ 1 \end{pmatrix} \Leftrightarrow \bar{\pi} = \begin{pmatrix} 1 \\ 0 \end{pmatrix}, \lambda_0 = \min \left\{ \frac{c_1 - (1,1) \cdot \begin{pmatrix} 1 \\ -1 \end{pmatrix}}{\bar{\pi}^T \cdot \begin{pmatrix} 1 \\ -1 \end{pmatrix}}, \frac{c_2 - (1,1) \cdot \begin{pmatrix} 1 \\ 0 \end{pmatrix}}{\bar{\pi}^T \cdot \begin{pmatrix} 1 \\ 0 \end{pmatrix}} \right\}$$

$$= \min \left\{ \frac{1-0}{1}, \frac{3-1}{1} \right\} = \min \left\{ \frac{1}{1}, \frac{2}{1} \right\} = \min\{1,2\} = 1$$

Illustration of RP(π)

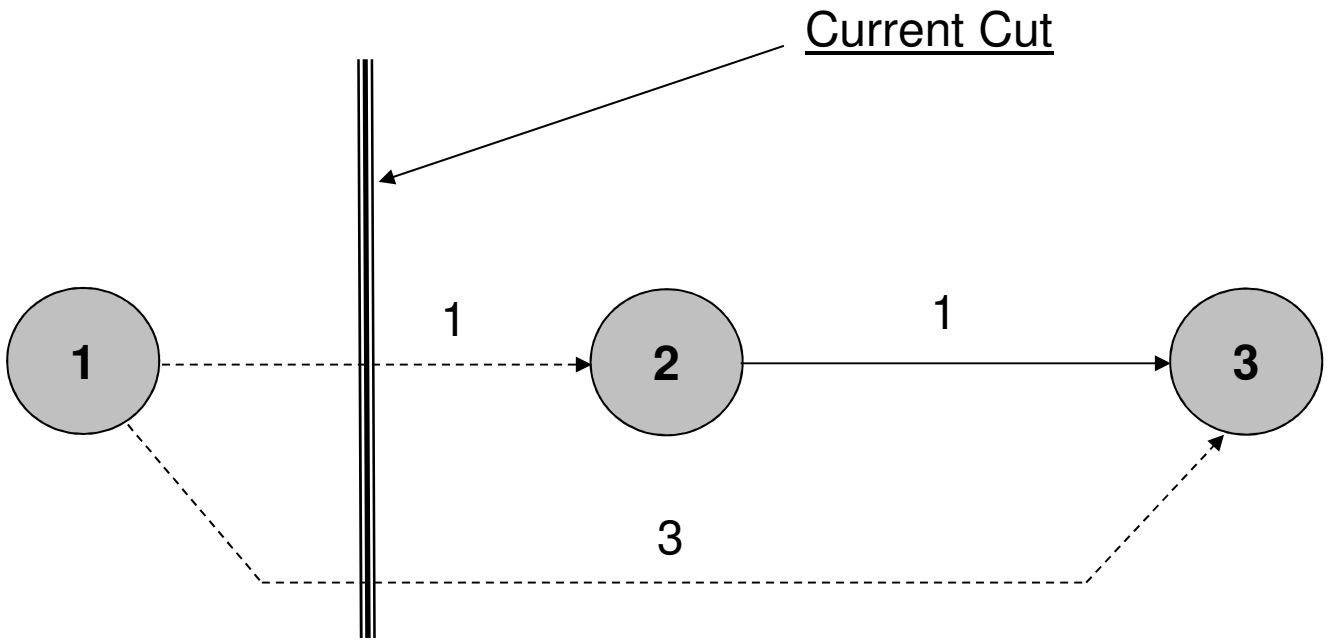

$$\pi^T = (1,1) \wedge \bar{\pi}^T = (1,0)$$

Updating π and J

$$\lambda_0 = 1 \Rightarrow \pi = \begin{pmatrix} 1 \\ 1 \end{pmatrix} + 1 \cdot \begin{pmatrix} 1 \\ 0 \end{pmatrix} = \begin{pmatrix} 2 \\ 1 \end{pmatrix}$$

$$\text{We have } \pi = \begin{pmatrix} 2 \\ 1 \end{pmatrix} \Rightarrow \begin{pmatrix} 1 \\ 3 \\ 1 \end{pmatrix} - A^T \cdot \pi = \begin{pmatrix} 1 \\ 3 \\ 1 \end{pmatrix} - \begin{pmatrix} 1 & -1 \\ 1 & 0 \\ 0 & 1 \end{pmatrix} \cdot \begin{pmatrix} 2 \\ 1 \end{pmatrix}$$

$$= \begin{pmatrix} 1-2+1 \\ 3-2 \\ 1-1 \end{pmatrix} = \begin{pmatrix} 0 \\ 1 \\ 0 \end{pmatrix} \Rightarrow J = \{1,3\} \wedge J^c = \{2\}$$

RP(π)

$$
\begin{array}{c|cc[c]cc}
-1 & 0 & 1 & [-1] & -1 & 0 \\
\hline
1 & 1 & 0 & (1) & 1 & 0 \\
0 & 0 & 1 & -1 & 0 & 1
\end{array}
\quad
\begin{array}{c|cccc}
0 & 1 & 1 & 0 & 0 & 0 \\
\hline
1 & 1 & 0 & 1 & 1 & 0 \\
1 & 1 & 1 & 0 & 1 & 1
\end{array}
$$

$\Rightarrow \xi_0 = 0$ optimal solutions are found, i.e.,

$x = \begin{pmatrix} 1 \\ 0 \\ 1 \end{pmatrix} \wedge \pi = \begin{pmatrix} 2 \\ 1 \end{pmatrix}$ are proven to be optimal for (P) and (D),

respectively

Illustration of RP(π)

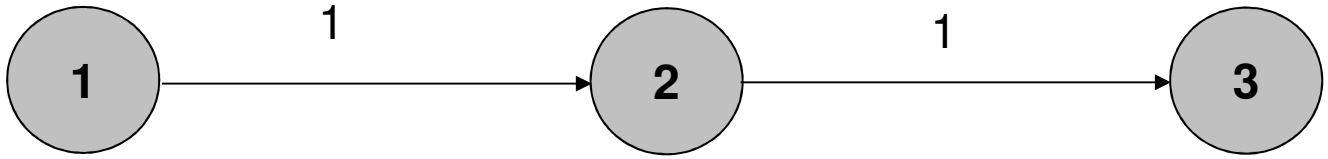

$$\pi^T = (2,1) \wedge \bar{\pi}^T = (0,0)$$

The shortest path $\langle 1,2,3 \rangle$ has an objective function value of 2.

A somewhat more complicated example

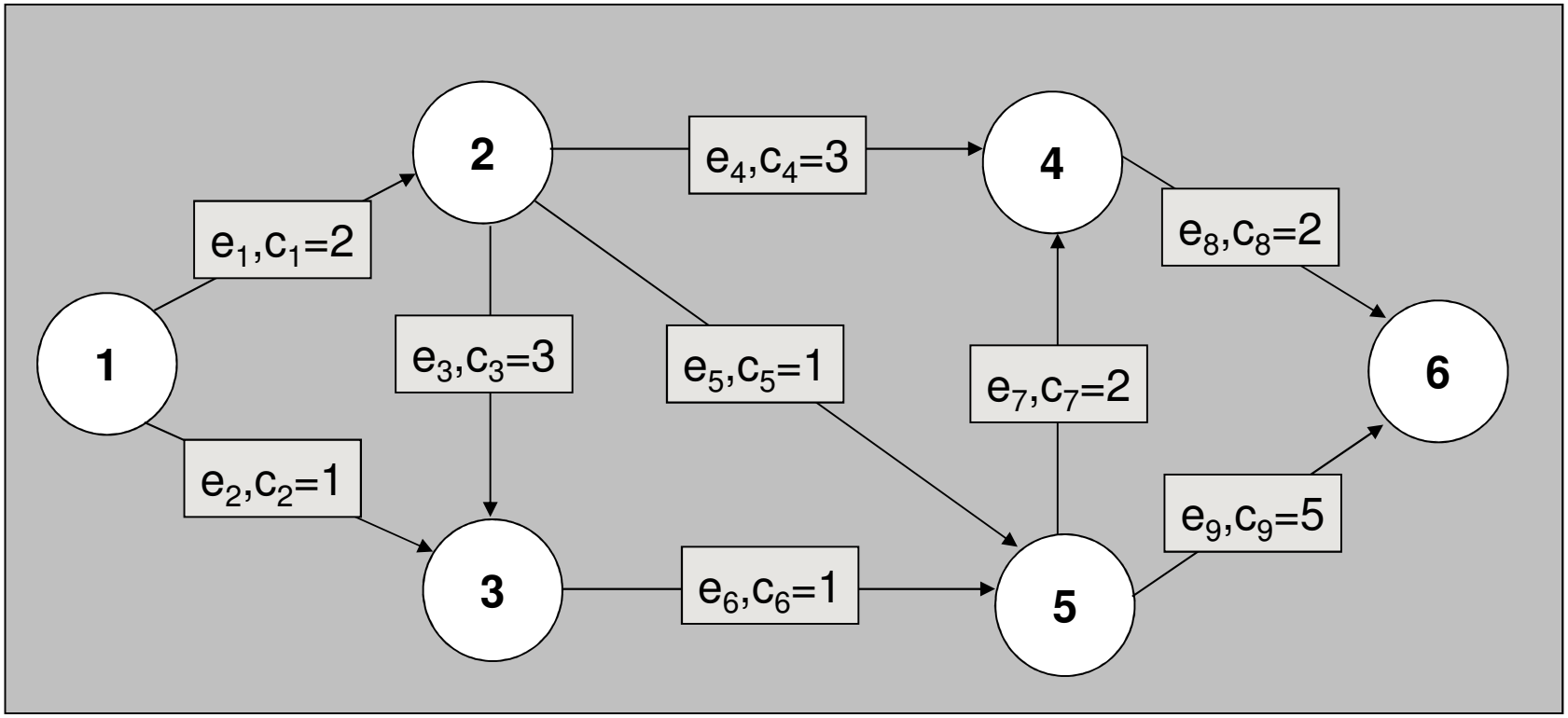

Iteration 1 – step 1

We commence our calculations with $\pi^T = (0,0,0,0,0)$

$\Rightarrow J = \varnothing \wedge J^c = \{1,2,3,4,5,6,7,8,9\}$

Consequently, we obtain the following tableau

0	1	1	1	1	1	0	0	0	0	0	0	0	0
1	1	0	0	0	0	1	1	0	0	0	0	0	0
0	0	1	0	0	0	−1	0	1	1	1	0	0	0
0	0	0	1	0	0	0	−1	−1	0	0	1	0	0
0	0	0	0	1	0	0	0	0	−1	0	0	−1	1
0	0	0	0	0	1	0	0	0	0	−1	−1	1	0

Iteration 1 – step 2

-1	0	0	0	0	0	0	0	0	0	0	0	-1	-1
1	1	0	0	0	0	1	1	0	0	0	0	0	0
0	0	1	0	0	0	-1	0	1	1	1	0	0	0
0	0	0	1	0	0	0	-1	-1	0	0	1	0	0
0	0	0	0	1	0	0	0	0	-1	0	0	-1	1
0	0	0	0	0	1	0	0	0	0	-1	-1	1	0

$\Rightarrow$

$$(0,0,0,0,0) = (1,1,1,1,1) - \pi^T \Leftrightarrow \pi^T = (1,1,1,1,1) \Rightarrow \lambda_0 = min\{2,5\} = 2$$

$$\Rightarrow \pi^T = (2,2,2,2,2) \Rightarrow J = \{8\} \wedge J^c = \{1,2,3,4,5,6,7,9\}$$

Iteration 2 – step 1

-1	0	0	0	0	0	0	0	0	0	0	0	0	$[-1]$	-1
1	1	0	0	0	0	1	1	0	0	0	0	0	0	0
0	0	1	0	0	0	-1	0	1	1	1	0	0	0	0
0	0	0	1	0	0	0	-1	-1	0	0	1	0	0	0
0	0	0	0	1	0	0	0	0	-1	0	0	-1	(1)	0
0	0	0	0	0	1	0	0	0	0	-1	-1	1	0	1

Iteration 2 – step 2

-1	0	0	0	1	0	0	0	0	-1	0	0	-1	0	-1
1	1	0	0	0	0	1	1	0	0	0	0	0	0	0
0	0	1	0	0	0	-1	0	1	1	1	0	0	0	0
0	0	0	1	0	0	0	-1	-1	0	0	1	0	0	0
0	0	0	0	1	0	0	0	0	-1	0	0	-1	1	0
0	0	0	0	0	1	0	0	0	0	-1	-1	1	0	1

$\Rightarrow$

$$\bar{\pi}^T = (1,1,1,0,1) \Rightarrow \lambda_0 = \min\{3,2,3\} = 2 \Rightarrow \pi^T = (2,2,2,2,2) + 2 \cdot (1,1,1,0,1)$$

$$= (4,4,4,2,4) \Rightarrow J = \{7,8\} \wedge J^c = \{1,2,3,4,5,6,9\}$$

Iteration 3 – step 1

-1	0	0	0	1	0	0	0	0	-1	0	0	$[-1]$	0	-1
1	1	0	0	0	0	1	1	0	0	0	0	0	0	0
0	0	1	0	0	0	-1	0	1	1	1	0	0	0	0
0	0	0	1	0	0	0	-1	-1	0	0	1	0	0	0
0	0	0	0	1	0	0	0	0	-1	0	0	-1	1	0
0	0	0	0	0	1	0	0	0	0	-1	-1	(1)	0	1

Iteration 3 – step 2

-1	0	0	0	1	1	0	0	0	-1	-1	-1	0	0	0
1	1	0	0	0	0	1	1	0	0	0	0	0	0	0
0	0	1	0	0	0	-1	0	1	1	1	0	0	0	0
0	0	0	1	0	0	0	-1	-1	0	0	1	0	0	0
0	0	0	0	1	1	0	0	0	-1	-1	-1	0	1	1
0	0	0	0	0	1	0	0	0	0	-1	-1	1	0	1

$$\Rightarrow \bar{\pi}^T = (1,1,1,0,0) \Rightarrow \lambda_0 = \min\{3-2,1,1\} = \min\{1,1,1\} = 1$$

$$\Rightarrow \pi^T = (4,4,4,2,4) + 1 \cdot (1,1,1,0,0) = (5,5,5,2,4)$$

$$\Rightarrow J = \{4,5,6,7,8\} \wedge J^c = \{1,2,3,9\}$$

Iteration 4 – step 1

−1	0	0	0	1	1	0	0	0	[−1]	−1	−1	0	0	0
1	1	0	0	0	0	1	1	0	0	0	0	0	0	0
0	0	1	0	0	0	−1	0	1	(1)	1	0	0	0	0
0	0	0	1	0	0	0	−1	−1	0	0	1	0	0	0
0	0	0	0	1	1	0	0	0	−1	−1	−1	0	1	1
0	0	0	0	0	1	0	0	0	0	−1	−1	1	0	1

Iteration 4 – step 2

−1	0	1	0	1	1	−1	0	1	0	0	−1	0	0	0
1	1	0	0	0	0	1	1	0	0	0	0	0	0	0
0	0	1	0	0	0	−1	0	1	1	1	0	0	0	0
0	0	0	1	0	0	0	−1	−1	0	0	1	0	0	0
0	0	1	0	1	1	−1	0	1	0	0	−1	0	1	1
0	0	0	0	0	1	0	0	0	0	−1	−1	1	0	1

Iteration 4 – step 3

-1	0	1	0	1	1	-1	0	1	0	0	$[-1]$	0	0	0
1	1	0	0	0	0	1	1	0	0	0	0	0	0	0
0	0	1	0	0	0	-1	0	1	1	1	0	0	0	0
0	0	0	1	0	0	0	-1	-1	0	0	(1)	0	0	0
0	0	1	0	1	1	-1	0	1	0	0	-1	0	1	1
0	0	0	0	0	1	0	0	0	0	-1	-1	1	0	1

Iteration 4 – step 4

-1	0	1	1	1	1	-1	-1	0	0	0	0	0	0	0
1	1	0	0	0	0	1	1	0	0	0	0	0	0	0
0	0	1	0	0	0	-1	0	1	1	1	0	0	0	0
0	0	0	1	0	0	0	-1	-1	0	0	(1)	0	0	0
0	0	1	1	1	1	-1	-1	0	0	0	0	0	1	1
0	0	0	1	0	1	0	-1	-1	0	-1	0	1	0	1

$$\Rightarrow \bar{\pi}^T = (1,0,0,0,0) \Rightarrow \lambda_0 = \min\{2,1\} = 1$$

$$\Rightarrow \pi^T = (5,5,5,2,4) + 1 \cdot (1,0,0,0,0) = (6,5,5,2,4)$$

$$\Rightarrow J = \{2,4,5,6,7,8\} \wedge J^c = \{1,3,9\}$$

Iteration 5 – step 1

−1	0	1	1	1	1	−1	[−1]	0	0	0	0	0	0	0
1	1	0	0	0	0	1	(1)	0	0	0	0	0	0	0
0	0	1	0	0	0	−1	0	1	1	1	0	0	0	0
0	0	0	1	0	0	0	−1	−1	0	0	(1)	0	0	0
0	0	1	1	1	1	−1	−1	0	0	0	0	0	1	1
0	0	0	1	0	1	0	−1	−1	0	−1	0	1	0	1

Iteration 5 – step 2

0	1	1	1	1	1	0	0	0	0	0	0	0	0	0
1	1	0	0	0	0	1	1	0	0	0	0	0	0	0
0	0	1	0	0	0	−1	0	1	1	1	0	0	0	0
1	1	0	1	0	0	1	0	−1	0	0	1	0	0	0
1	1	1	1	1	1	0	0	0	0	0	0	0	1	1
1	1	0	1	0	1	1	0	−1	0	−1	0	1	0	1

$\Rightarrow \xi_0 = 0 \Rightarrow x^T = (0,1,0,0,0,1,1,1,0) \wedge \pi^T = (6,5,5,2,4)$ are optimal solutions to (P) and (D), respectively.

The shortest path $\langle 1,3,5,4,6 \rangle$ has an objective function value of 6.

Dijkstra's Algorithm

BEGIN

$c_{i,j} := \infty, \forall (i,j) \notin E$ The following must hold : $c_{i,j} \geq 0, \forall (i,j) \in E$

$W := \{s\}; \pi(s) := 0;$ Denote s as the source of the graph

FOR all $y \in V \setminus \{s\}$ DO $\pi(y) := c_{s,y}$

WHILE $(W \neq V)$ DO

$\pi(x) := \min\{\pi(y) \mid y \notin W\}$

$W := W \cup \{x\}$

FOR all $y \in V \setminus W$ DO $\pi(y) := \min\{\pi(y), \pi(x) + c_{x,y}\}$

END DO

END

Laufzeit $O(n \cdot \log\ n + m)$

Full version with storing an optimal path

BEGIN

$c_{ij} := \infty \; \forall (i,j) \notin E$ — The following must hold for this algorithm: $c_{ij} \geq 0 \; \forall (i,j) \in E$

$W := \{s\}$ — Denote s as the source of the graph

$\pi_i := \begin{cases} 0 & \text{if } i = s \\ c_{si} & \text{otherwise} \end{cases} \forall i \in V$ — Let π_i be the length of the shortest path $\langle s, ..., i \rangle$

$Pre_i := s \; \forall (s,i) \in E$ — Let Pre_i be the preceeding vertex of i in the shortest path $\langle s, ..., Pre_i, i \rangle$

WHILE $W \neq V$ DO

$\pi_x := \min \{\pi_y \mid y \notin W\}$

$W := W \cup \{x\}$

FOR all $y \in V \setminus W$ DO

IF $\pi_x + c_{xy} < \pi_y$ THEN DO

$\pi_y := \pi_x + c_{xy}$

$Pre_y := x$

END DO

END DO

END DO

END

Dijkstra's Algorithm and the simple example

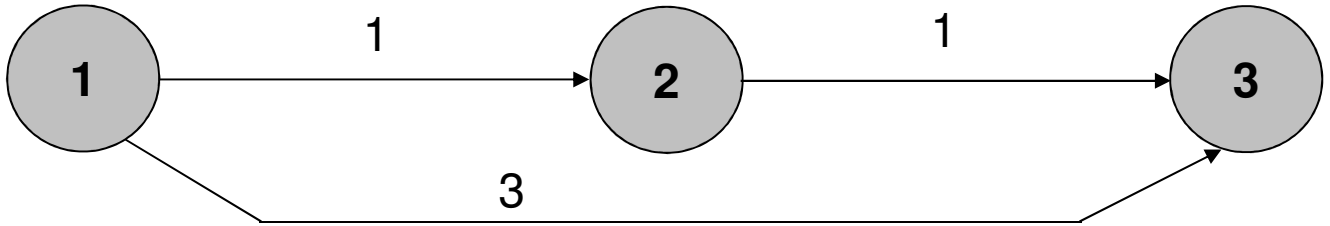

$$(c_{i,j}) = \begin{pmatrix} \infty & 1 & 3 \\ \infty & \infty & 1 \\ \infty & \infty & \infty \end{pmatrix}$$

x	1	2	3	
π_x	0	1	3	START
Pre_x		1	1	$W = \{1\}$
π_x	0	1	2	ITERATION 1
Pre_x		1	2	$W = \{1,2\}$
π_x	0	1	2	ITERATION 2
Pre_x		1	2	$W = \{1,2,3\}$

$V \setminus W = \varnothing \Rightarrow$ STOP

The shortest path $\langle 1,2,3 \rangle$ has an objective function value of 2.

Dijkstra algorithm – running time

- In each step of the procedure a node is determined (labeled) to which a shortest path is found
- Hence, there are *n-1* steps for *n*=|*V*| nodes
- Moreover, each arc of set *E* in the network has to be considered once
- If all nodes are stored in a min-heap (sorting criterion is the distance to the labeled nodes) we obtain the total asymptotic running time

$$O\left(|E|+|V|\cdot\log\left(|V|\right)\right)$$

Negative arc weights

- The basic idea of the Dijkstra procedure is based on the fact that if we have identified a node with a minimum distance to the labeled nodes the shortest path to this node is found
- However, this is not necessarily correct if negative arc weights occur
- In this case, a path to another node with even longer length may become shorter over an arc with negative weight
- Note that the Dijkstra algorithm can be extended to the case of negative arc weights. However, this results in an increased time complexity of $O(n^3)$ (cf., Nemhauser (1972), Bazaraa and Langley (1974))

Cycles of negative weights

- The shortest path problem in a network may be not well-defined anymore if there exists cycles of negative length
  - In this case, some paths can be arbitrarily shortened by integrating this cycle infinitely often
  - Hence, if there is a connection to this cycle, the problem has no solution and, therefore, is not well-defined

6.2 Bellman-Ford algorithm

- The Bellman-Ford algorithm is based on separate algorithms by Bellman and by Ford (cf. Bellman (1958), Ford and Fulkerson (1962))
  - Like the Dijkstra algorithm, it solves the single source shortest path problem starting from a source node s
  - But, in contrast to the Dijkstra algorithm, it is able to deal with edges that possess a negative weight
  - Moreover, the algorithm of Bellman-Ford also identifies whether a cycle of positive length exists in the graph that is reachable from s
- The algorithm possesses a very simple structure that enables us to easily derive its asymptotic running time
- However, the proving of the correctness of the algorithm becomes quite technical

Attributes of each vertex v

- s single source from that the shortest paths have to be found
- $d(v)$ shortest path estimate of vertex v
- $\pi(v)$ predecessor node in graph G_π (node that lastly brought an reduction of the estimate of vertex v)
- $w(u,v)$ weight of arc (u,v) in network $G=(V,E)$
- $\delta(v)/\delta(s,v)$ actual length of the shortest path from s to v
- $\delta(u,v)$ actual length of the shortest path from u to v

Initialization of the attributes

procedure *initialization*$(G=(V,E),s)$

$d(s)=0$

for *each vertex* $v \in V$

do $d(v)=\infty, \pi(v)=-1$ ***od***

Technique of *relaxation*

- The algorithm of Bellman and Ford iteratively applies the technique of relaxation
- This operation tries to reduce the estimate $d(v)$ of a node v by considering a reduction over an arc (u, v) that connects the estimate $d(u)$ of node u to node v

procedure *relax*(u, v, w)

if $d(v) > d(u) + w(u, v)$

then $d(v) = d(u) + w(u, v),\ \pi(v) = u$

Bellman-Ford – pseudo code

procedure *Bellman-Ford*$(G = (V, E), w, s)$

1. *initialization*$(G = (V, E), s)$
2. **for** $i = 1$ *to* $|V| - 1$
3. **for** *each edge* $(u, v) \in E$
4. *relax*(u, v, w)
5. **for** *each edge* $(u, v) \in E$
6. **if** $d(v) > d(u) + w(u, v)$
7. **then return** *FALSE, stop*
8. **return** *TRUE*

Predecessor subgraph G_π

- We often wish to compute not only shortest-path weights, but also the nodes visited on these shortest paths
- For this purpose, for a given graph $G = (V, E)$, we introduce a predecessor subgraph G_π as follows
  - For each vertex $v \in V$, a predecessor $\pi(v)$ that is either another vertex or "-1"
  - The Bellman-Ford algorithm introduced in the following will generate a predecessor subgraph G_π such that the chain of predecessors originating at a vertex v runs backwards along a shortest path from s to v.
  - We define the predecessor subgraph $G_\pi = (V_\pi, E_\pi)$ with

$$V_\pi = \{v \in V \mid \pi(v) \neq -1\} \cup \{s\}$$

$$\text{and } E_\pi = \{(\pi(v), v) \in E \mid v \in V_\pi - \{s\}\}$$

Shortest-paths tree

- *Let $G = (V, E)$ be a weighted directed graph with weight function $w: E \rightarrow IR$ and source node s.*
- *A shortest path tree rooted at node s of G is a directed subgraph $G' = (V', E')$ with*
  1. *$V' \subseteq V$ and $E' \subseteq E$*
  2. *V' is a set of nodes that are reachable from node s*
  3. *$G' = (V', E')$ forms a rooted tree (a tree is a connected graph such that each node possesses an unambiguously defined predecessor) with root node s*
  4. *For all $v \in V'$, the unique simple path from s to v in $G' = (V', E')$ is a shortest path from s to v in G*

Triangle inequality

6.2.1 Lemma

Let $G = (V, E)$ be a weighted directed graph with weight function $w: E \to IR$ and source node s. Then, for all edges $(u, v) \in E$, we have

$$\delta(s, v) \leq \delta(s, u) + w(u, v)$$

Proof of Lemma 6.2.1

- Suppose that p is a shortest path from source s to vertex v
- Then p has no more weight than any other path from s to v
- Specifically, path p has no more weight than the particular path that takes a shortest path from source s to vertex u and then takes edge (u, v)

Upper bound property

6.2.2 Lemma

Let $G = (V, E)$ be a weighted directed graph with weight function $w: E \to IR$ and source node s. Moreover, the attributes are initialized by executing the procedure initialization$(G = (V, E), w, s)$. Then, $d(v) \geq \delta(s, v), \forall v \in V$ and this invariant is maintained over any sequence of relaxation steps on the edges of G. Furthermore, once $d(v)$ coincides with $\delta(s, v)$, it never changes.

Proof of Lemma 6.2.2

- This proof is given by induction over the number *k* of performed relaxation steps
- Start of induction with *k*=0, i.e., no relaxation step is executed
  - Here, the proposition obviously holds for all $v \in V - \{s\}$ since we initialized the shortest path estimate by $d(v) = \infty \geq \delta(s, v) = \delta(v)$
  - Moreover, $d(s) = 0 \geq \delta(s, s) = \delta(s)$ holds since $\delta(s, s) = \delta(s) = -\infty$ if s is on a cycle of negative length and $\delta(s, s) = \delta(s) = 0$ otherwise
  - Therefore, the proposition holds

Proof of Lemma 6.2.2

- Induction step $k \rightarrow k+1$
  - We consider the relaxation of an edge (u, v). By the inductive proposition we know that, prior to the $k+1$th relaxation, it holds that $d(x) \geq \delta(s, x), \forall x \in V$
  - In this particular relaxation of edge (u, v) only the estimate $d(v)$ may be updated
  - If it is not updated we know, by the inductive proposition $d(v) \geq \delta(s, v)$
  - Otherwise, we have $d(v) = d(u) + w(u, v)$
    - Due to the inductive proposition, we know that
      $$d(v) = d(u) + w(u, v) \geq \delta(s, u) + w(u, v)$$
    - And due to the triangle property (Lemma 6.2.1), we have $d(v) = d(u) + w(u, v) \geq \delta(s, u) + w(u, v) \geq \delta(s, v)$

Proof of Lemma 6.2.2

- In order to see that the value of $d(v)$ never changed once it coincides with $\delta(s,v)$, note that we have just proven that $d(v) \geq \delta(s,v), \forall v$, and it cannot increase since the application of the relaxation operation may only reduce the estimate $d(v)$ but never increase it
- This completes the proof

No-path property

6.2.3 Corollary

Suppose that in a weighted directed graph $G = (V, E)$ *with weight function* $w: E \to IR$ *no path connects a source node* s *to a given node* v*. Then, after the graph is initialized by calling the procedure initialization*$(G = (V, E), w, s)$*, we have* $d(v) = \infty$ *and this invariant is maintained over any sequence of relaxation steps on the edges of G.*

Proof of Corollary 6.2.3

- Due to the upper bound property (Lemma 6.2.2), we conclude that

$$\infty = \delta(s, v) \leq d(v) \Rightarrow d(v) = \infty$$

Simple consequence

6.2.4 Lemma

Let $G = (V, E)$ be a weighted directed graph with weight function $w: E \to IR$ and $(u, v) \in E$. Then, immediately after relaxing edge $(u, v) \in E$ by executing the procedure relax(u, v, w), we have $d(v) \leq d(u) + w(u, v)$.

Proof of Lemma 6.2.4

- If, just before relaxing the edge $(u, v) \in E$, we have $d(v) > d(u) + w(u, v)$, then we have $d(v) = d(u) + w(u, v)$ afterward
- If, instead, we have $d(v) \leq d(u) + w(u, v)$ just before relaxing the edge $(u, v) \in E$, then no update is conducted and we also obtain $d(v) \leq d(u) + w(u, v)$ afterward
- This completes the proof

Convergence property

6.2.5 Lemma

Let $G = (V, E)$ be a weighted directed graph with weight function $w: E \to IR$, source node $s \in V$ and two nodes $u, v \in V$. Moreover, let p a shortest path from s to v, while the last used arc of p is $(u, v) \in E$.

After executing the procedure initialization$(G = (V, E), w, s)$ and performing a sequence of relaxation steps that includes the call relax(u, v, w) is executed on the edges of $G = (V, E)$. If $d(u) = \delta(s, u)$ at any time prior to the call, then $d(v) = \delta(s, v)$ at all times after the call.

Proof of Lemma 6.2.5

- Due to the upper bound property (Lemma 6.2.2), if we obtain $d(u) = \delta(s,u)$ at some point before calling *relax*(u,v,w), then this equality holds thereafter. Moreover, after calling *relax*(u,v,w), due to Lemma 6.2.4, we obtain

$$d(v) \leq d(u) + w(u,v) = \delta(s,u) + w(u,v)$$

- And due to the definition of p and the fact that subpaths of a shortest path are also shortest paths (otherwise, the shortest path can be shortened), we conclude

$$d(v) \leq d(u) + w(u,v) = \delta(s,u) + w(u,v) = \delta(s,v)$$

Proof of Lemma 6.2.5

- Again, due to the upper bound property (Lemma 6.2.2), after obtaining $d(v) = \delta(s, v)$, this equality is maintained thereafter
- This completes the proof

Path-relaxation property

6.2.6 Lemma

Let $G = (V, E)$ be a weighted directed graph with weight function $w: E \to IR$ and a source node $s \in V$. Moreover, let $p = \langle v_0, \ldots, v_k \rangle$ any shortest path from $s = v_0$ to v_k. After executing the procedure initialization$(G = (V, E), w, s)$ and performing a sequence of relaxation steps that includes, in order, the calls relax(v_0, v_1, w), relax(v_1, v_2, w),…, relax(v_{k-1}, v_k, w), then $d(v_k) = \delta(s, v_k) = \delta(v_0, v_k)$ after these relaxations and at all times afterward. This property holds no matter what other edge relaxations occur, including relaxations that are intermixed with relaxations of the edges of p.

Proof of Lemma 6.2.6

- This proof is given by induction, i.e., specifically, we show that, after the ith edge of path p (i.e., edge (v_{i-1}, v_i)) is relaxed, we have $d(v_i) = \delta(s, v_i) = \delta(v_0, v_i)$
- The basis of the induction is $i = 0$
  - No relaxation of edges of path p is performed
  - Hence, due to the initialization, we have
    $$d(v_0) = d(s) = 0 = \delta(s, s) = \delta(s, v_0)$$
  - Due to the upper bound property (Lemma 6.2.2), the value of $d(v_0)$ never changes after the initialization

Proof of Lemma 6.2.6

- For the inductive step, we assume, by induction, that it holds $d(v_{i-1}) = \delta(s, v_{i-1}) = \delta(v_0, v_{i-1})$ and we call *relax*(v_{i-1}, v_i, w)
- Hence, due to the convergence property (Lemma 6.2.5), we conclude $d(v_i) = \delta(s, v_i) = \delta(v_0, v_i)$ and, again, due to the upper bound property (Lemma 6.2.2), the value of $d(v_i)$ never changes after this relaxation
- This completes the proof

Relaxation and shortest-paths trees

- We now show that once a sequence of relaxations has caused the shortest-path estimates to coincide with the shortest-path weights, the predecessor subgraph G_π induced by the resulting values is a shortest-paths tree for G
- We start with the following lemma, which shows that the predecessor subgraph always forms a rooted tree whose root is the source

Rooted tree with root s

6.2.7 Lemma

Let $G = (V, E)$ be a weighted directed graph with weight function $w: E \to IR$ and a source node $s \in V$, while there exists no cycle of negative length that is reachable from node s. Then, after executing the procedure initialization$(G = (V, E), w, s)$, the predecessor subgraph G_π forms a rooted tree with root s, and any sequence of relaxation steps on edges of G maintains this property as an invariant.

Proof of Lemma 6.2.7

- Initially, s is the only node in the predecessor subgraph G_π and the proposition holds
- Therefore, we consider the situation after performing a sequence of relaxation steps
- First, we show that G_π is acyclic
  - Suppose by performing the relaxation steps there occurs a first cycle $c = \langle v_0, \ldots, v_k \rangle$ in G_π with $v_0 = v_k$. This implies $\forall i \in \{1, \ldots, k\}: \pi(v_i) = v_{i-1}$
  - By renumbering the nodes on the cycle, we can assume, without loss of generality, that this cycle occurs after calling the operation *relax*(v_{k-1}, v_k, w)
  - Clearly, all nodes v_i on the cycle are reachable from s since $\pi(v_i) \neq -1$ and, therefore, the upper bound property (Lemma 6.2.2) tells us that $d(v_i)$ is finite and through $d(v_i) \geq \delta(s, v_i)$, we have $\delta(s, v_i) \neq \infty$ and, hence, there is a connection from s to v_i

Proof of Lemma 6.2.7

- First, we show that G_π is acyclic (continuation)
  - We consider the situation just before calling the operation *relax*(v_{k-1}, v_k, w)
  - There, since it holds $\forall i \in \{1, \dots, k-1\}: \pi(v_i) = v_{i-1}$, the last update of $d(v_i)$ was $d(v_i) = d(v_{i-1}) + w(v_{i-1}, v_i)$ and since then, $d(v_{i-1})$ was only further decreased, i.e., we have $d(v_i) \geq \delta(s, v_{i-1}) + w(v_{i-1}, v_i), \forall i \in \{1, \dots, k-1\}$
  - Due to $\pi(v_k) = v_{k-1}$, just prior to the update, we have $d(v_k) > d(v_{k-1}) + w(v_{k-1}, v_k)$ (otherwise, no update would be performed by calling *relax*(v_{k-1}, v_k, w))
  - We calculate the estimates of nodes on cycle c

$$\sum_{i=1}^{k} d(v_i) > \sum_{i=1}^{k} \left(d(v_{i-1}) + w(v_{i-1}, v_i) \right) = \sum_{i=1}^{k} d(v_{i-1}) + \sum_{i=1}^{k} w(v_{i-1}, v_i)$$

Since $v_0 = v_k$, we have $\sum_{i=1}^{k} d(v_i) = \sum_{i=1}^{k} d(v_{i-1})$ and this implies $0 > \sum_{i=1}^{k} w(v_{i-1}, v_i)$

  - Hence, we have a cycle of negative length which provides the desired contradiction
  - Thus, no cycle is possible

Proof of Lemma 6.2.7

- In order to show that G_π is a rooted tree with root s, it is sufficient to prove that for all $v \in V_\pi$ there is a unique single path from s to v in G_π
- First, we show that there is a path from s to v in G_π
  - Nodes v in G_π are those with $\pi(v) \neq -1$ plus the source node s
  - By induction over the number of the relaxation steps k, we show that a path exists from s to $v \in V_\pi$ in G_π
    - $k = 0$: Trivial case since the path starts at $s \in V_\pi$
    - $k > 0$: We consider the kth relaxation that relaxes an edge $(u, v) \in E$ and consider node $v \in V_\pi$. If the estimate $d(v)$ was not reduced the connection results by the proposition of the induction
    - Otherwise, if the estimate $d(v)$ was reduced, we have a connection over $\pi(v) = u$ that is connected by the proposition of the induction

Proof of Lemma 6.2.7

- Finally, we have to show for all $v \in V_\pi$ that there is a single path from s to v in G_π
- Let us assume G_π contains two paths from s to v
  - Path 1: $s \rightsquigarrow u \rightsquigarrow x \longrightarrow z \rightsquigarrow v$
  - Path 2: $s \rightsquigarrow u \rightsquigarrow y \longrightarrow z \rightsquigarrow v$
  - With $x \neq y$ (Note that u may be s and/or z may be v)
  - But, then $\pi(z) = x$ and $\pi(z) = y$ which implies the contradiction that $x = y$
- All in all, we conclude that for all $v \in V_\pi$ there is a unique single path from s to v in G_π and, therefore, *predecessor subgraph G_π forms a rooted tree with root s*

Predecessor-subgraph property

6.2.8 Lemma

Let $G = (V, E)$ be a weighted directed graph with weight function $w: E \to IR$ and a source node $s \in V$, while there exists no cycle of negative length that is reachable from node s. Then, after calling the procedure initialization$(G = (V, E), w, s)$ any sequence of relaxation steps on edges of $G = (V, E)$ is executed that produces for all $v \in V$ $d(v) = \delta(s, v)$. Then, the predecessor subgraph G_π is a shortest path tree rooted at s.

Proof of Lemma 6.2.8

- In what follows, it is shown that the four attributes of shortest path trees are fulfilled by the predecessor subgraph G_π
- These are the following

> *A shortest path tree rooted at node s of G is a directed subgraph $G' = (V', E')$ if*
>
> 1. *$V' \subseteq V$ and $E' \subseteq E$*
> 2. *V' is a set of nodes that are reachable from node s*
> 3. *$G' = (V', E')$ forms a rooted tree (a tree is a connected graph such that each node possesses an unambiguously defined predecessor) with root node s*
> 4. *For all $v \in V'$, the unique simple path from s to v in $G' = (V', E')$ is a shortest path from s to v in G*

1. Is trivial
2. If a node v is reachable from s we have $\delta(s, v) \neq \infty$. Therefore, if $v \in V_\pi$ we have $\pi(v) \neq -1$ and $d(v) \neq \infty$. Due to $d(v) \geq \delta(s, v)$, we know that $\delta(s, v) \neq \infty$ and node v is reachable from s
3. Follows directly from Lemma 6.2.7

Proof of Lemma 6.2.8

4. Let $p = \langle v_0, \ldots, v_k \rangle$ the unique path in G_π with $v_0 = s$ and $v_k = v$. This implies $\forall i \in \{1, \ldots, k\}: \pi(v_i) = v_{i-1}$, $d(v_i) \geq d(v_{i-1}) + w(v_{i-1}, v_i)$ and (by proposition) $d(v_i) = \delta(s, v_i)$. Hence, we obtain $\delta(s, v_i) \geq \delta(s, v_{i-1}) + w(v_{i-1}, v_i) \Rightarrow \delta(s, v_i) - \delta(s, v_{i-1}) \geq w(v_{i-1}, v_i)$. By summing the weights along the path p we get

$$w(p) = \sum_{i=1}^{k} w(v_{i-1}, v_i) \leq \sum_{i=1}^{k} \left(\delta(s, v_i) - \delta(s, v_{i-1})\right) = \delta(s, v_k) - \underbrace{\delta(s, v_0)}_{=\delta(s,s)=0} = \delta(s, v_k)$$

Thus, we have $w(p) \leq \delta(s, v_k) = \delta(s, v)$ and since $\delta(s, v)$ is the length of the shortest path, we conclude $w(p) = \delta(s, v)$, and thus p is a shortest path from s *to* v *in* G

This completes the proof

Correctness of the found estimates

6.2.9 Lemma

Let $G = (V, E)$ be a weighted directed graph with weight function $w: E \to IR$ and a source node $s \in V$, while there exists no cycle of negative length that is reachable from node s. Then, after calling the procedure initialization$(G = (V, E), w, s)$ and $|V| - 1$ iterations of the for loop of lines 2-4 of the Bellman-Ford algorithm, we have $d(v) = \delta(s, v)\ \forall v \in V$ with v is reachable from s.

Proof of Lemma 6.2.9

- We apply the path-relaxation property (Lemma 6.2.6). For this purpose, consider any node v that is reachable from s and $p = \langle v_0, \dots, v_k \rangle$ *any shortest path from* $s = v_0$ *to* $v_k = v$.
- Clearly, p has at most $|V| - 1$ edges, and so we have $k \leq |V| - 1$. Each of the $|V| - 1$ iterations of the for loop of lines 2-4 relaxes all $|E|$ edges. Among the edges relaxed in the ith iteration, for $i = 1,2, \dots, k$ is (v_{i-1}, v_i).
- By applying the path-relaxation property (Lemma 6.2.6), we conclude $d(v) = d(v_k) = \delta(v_0, v_k) = \delta(s, v_k) = \delta(s, v)$
- This completes the proof

Identifying cycles of negative length

6.2.10 Corollary

Let $G = (V, E)$ be a weighted directed graph with weight function $w: E \to IR$ and a source node $s \in V$, while there exists no cycle of negative length that is reachable from node s. Then, $\forall v \in V$ there is a path from s to v if and only if the Bellman-Ford algorithm terminates with $d(v) < \infty$ when it is run on G.

Proof of Corollary 6.2.10

- First, we assume that there is a path from s to v
- Then, there exists a shortest path $p = \langle v_0, \ldots, v_k \rangle$ from $s = v_0$ to $v_k = v$
- Hence, by Lemma 6.2.9, we have $d(v) = \delta(s, v) < \infty$

- Second, we assume that there is no path from s to v
- Therefore, by Lemma 6.2.3, we have $d(v) = \infty = \delta(s, v)$

- This completes the proof

Correctness of the Bellman-Ford algorithm

6.2.11 Theorem

Let the Bellman-Ford algorithm run on a weighted, directed graph $G = (V, E)$ with weight function $w: E \to IR$ and a source node $s \in V$. If $G = (V, E)$ contains no cycle of negative length that is reachable from node s, then the algorithm returns TRUE, we have $d(v) = \delta(s, v)\ \forall v \in V$, and the predecessor subgraph G_π is a shortest path tree rooted at s. If G does contain a negative-weight cycle reachable from s, then the algorithm returns FALSE.

Proof of Theorem 6.2.11

- First, we assume that G does not contain a cycle that is reachable from s
  - If node v is reachable from s, then the proposition $d(v) = \delta(s, v)$ $\forall v \in V$ results from Lemma 6.2.9
  - If node v is not reachable from s, then the proposition $d(v) = \delta(s, v) = \infty$ results from applying Corollary 6.2.3
  - Moreover, the predecessor-subgraph property (Lemma 6.2.8) proves that the predecessor subgraph G_π is a shortest path tree rooted at s.
  - It remains to show that the TRUE/FALSE output is correct
  - At termination, we have for all edges $(u, v) \in E$

$$d(v) = \delta(s,v) \leq \underbrace{\delta(s,u) + w(u,v)}_{\text{by the triangle inequality}} = d(u) + w(u,v)$$

Proof of Theorem 6.2.11

We consider the lines 5-8 of the Bellman-Ford algorithms

```
5.    for each edge (u, v) ∈ E
6.            if d(v) > d(u) + w(u, v)
7.                    then return FALSE, stop
8.    return TRUE
```

- Hence, none of the tests in line 6 causes the algorithm to return FALSE. Therefore, it returns TRUE
- Second, if there is a cycle of negative length in graph G that is reachable from the source s
- Let the cycle be $c = \langle v_0, \ldots, v_k \rangle$ with $v_0 = v_k$. Then, it holds

$$\sum_{i=1}^{k} w(v_{i-1}, v_i) < 0$$

Proof of Theorem 6.2.11

- We assume that the Bellman-Ford algorithm returns TRUE
- Thus, since we have not return FALSE, it holds that

$$d(v_i) \leq d(v_{i-1}) + w(v_{i-1}, v_i), \forall i = 1,2,\ldots,k$$

- Summing the inequalities around cycle c results in

$$\sum_{i=1}^{k} d(v_i) \leq \sum_{i=1}^{k} \left(d(v_{i-1}) + w(v_{i-1}, v_i) \right) = \sum_{i=1}^{k} d(v_{i-1}) + \sum_{i=1}^{k} w(v_{i-1}, v_i)$$

$$= \underbrace{\sum_{i=1}^{k} d(v_i)}_{\text{Since } v_0 = v_k} + \sum_{i=1}^{k} w(v_{i-1}, v_i) \Leftrightarrow 0 \leq \sum_{i=1}^{k} w(v_{i-1}, v_i)$$

- This is a contradiction to the assumption of the negative length of cycle c
- Therefore, the algorithm provides the correct output FALSE if there is a cycle of negative length in graph G that is reachable from the source s

Complexity

- The initialization step (line 1) possesses an asymptotic running time of $O(|V|)$
- Each of the $|V| - 1$ passes over the edges (lines 2-4) requires an asymptotic running time of $O(|E|)$
- The final for loop of lines 5-7 takes asymptotic running time of $O(|E|)$
- Hence, all in all, we have a total asymptotic running time of $O(|V| \cdot |E|)$

Example

If edge $(u,v) \in E$ is printed in bold it holds that $\pi(v) = u$ and $\pi(v) = -1$, otherwise

The sequence of edges is given by $\langle (t,x),(t,y),(t,z),(x,t),(y,x),(y,z),(z,x),(z,s),(s,t),(s,y) \rangle$

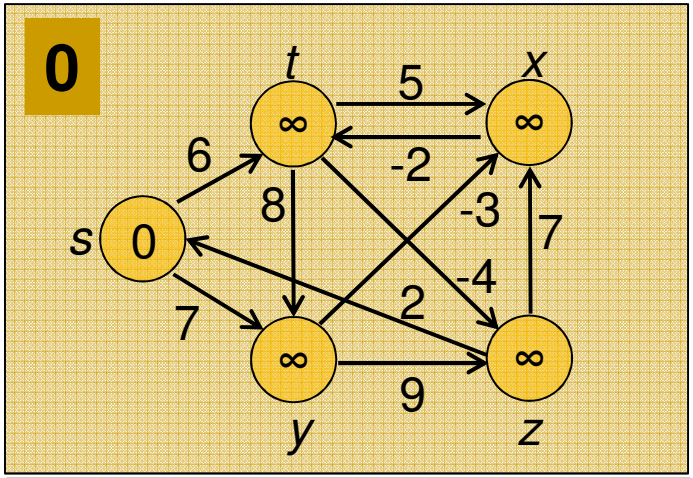

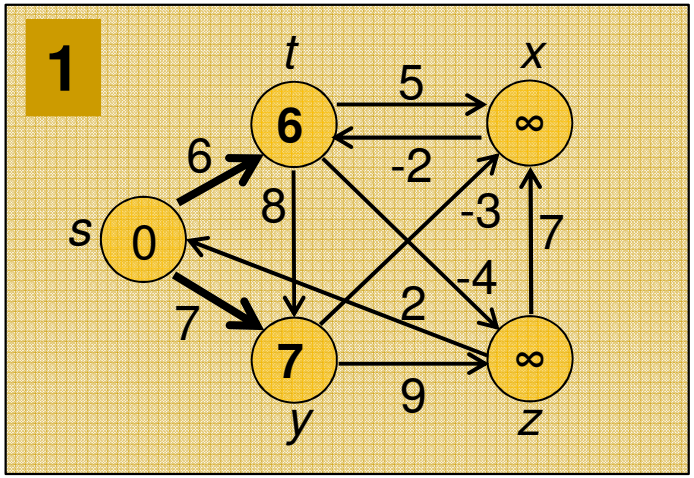

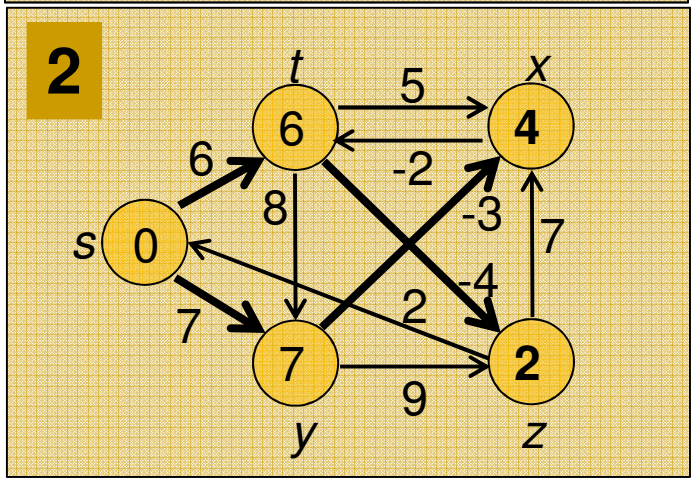

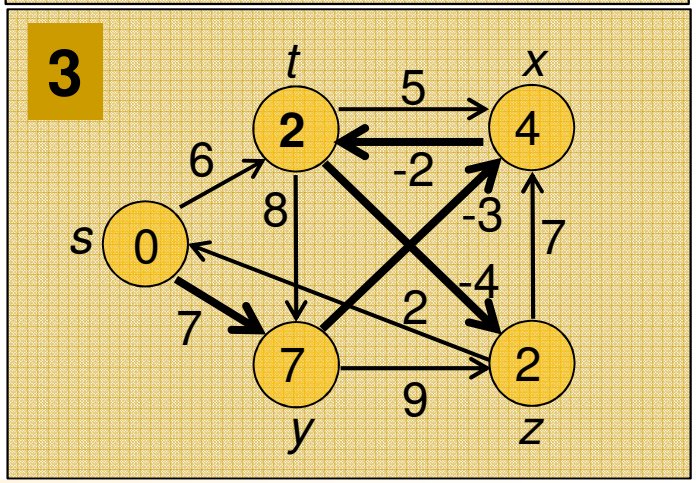

Example

If edge $(u,v) \in E$ is printed in bold it holds that $\pi(v) = u$ and $\pi(v) = -1$, otherwise

The sequence of edges is given by $\langle (t,x),(t,y),(t,z),(x,t),(y,x),(y,z),(z,x),(z,s),(s,t),(s,y) \rangle$

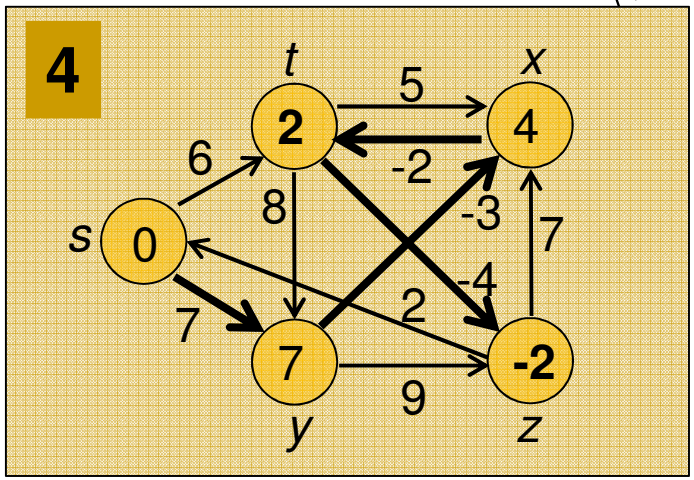

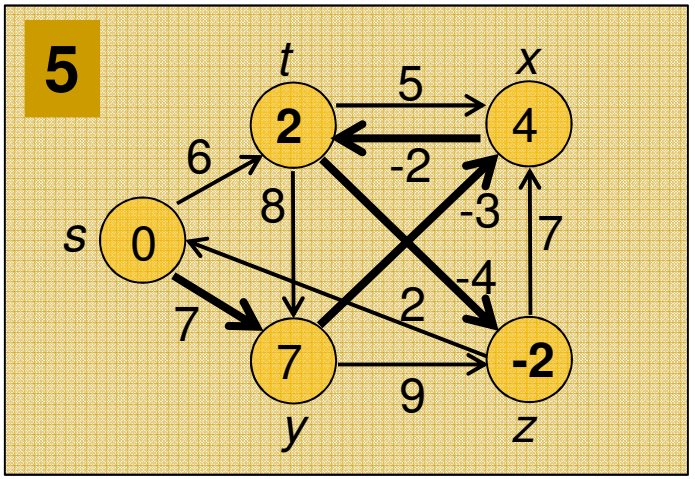

Node	π	d	Path
s	-1	0	s
t	x	2	s-y-x-t
y	s	7	s-y
x	y	4	s-y-x
z	t	-2	s-y-x-t-z

Example

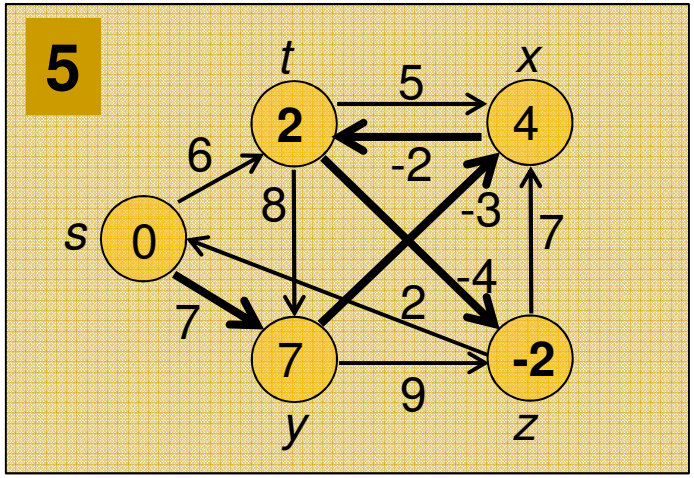

Node	π	d	Path
s	-1	0	s
t	x	2	s-y-x-t
y	s	7	s-y
x	y	4	s-y-x
z	t	-2	s-y-x-t-z

5. ***for*** *each edge* $(u, v) \in E$
6. ***if*** $d(v) > d(u) + w(u, v)$
7. ***then return*** *FALSE, stop*
8. ***return*** *TRUE*

Since $d(v) > d(u) + w(u, v)$ does not apply for any edge $(u, v) \in E$, the Bellman-Ford algorithm returns TRUE in this example

6.3 Floyd-Warshall algorithm

- In what follows, we introduce a second shortest path algorithm that computes the shortest path between all pairs of nodes in a network
- Therefore, this algorithm is frequently denoted as the “all pairs shortest path” procedure
- In contrast to the Dijkstra algorithm, it works with negative arc weights
- Moreover, the algorithm can be extended in order to deal with cycles of negative length
- The running time of this procedure is $O(n^3)$

Triangle operation

6.3.1 Definition

We consider a quadratic distance matrix $d_{i,j}$. A triangle operation for a fixed node *k* is

$$d_{i,j} = \min\left\{d_{i,j}, d_{i,k} + d_{k,j}\right\} \quad \forall i,k = 1,\ldots,n \text{ but } i,k \neq j.$$

This includes $i = j$.

- This operation provides the basic idea of the algorithm

  For each relation it is iteratively tested whether a length reduction over an intermediate node *k* is possible or not

Iterative application of the triangle operation

6.3.2 Theorem

We initialize $d_{i,j}$ with $c_{i,j}$ and set $d_{i,i} = 0$.

By iteratively performing the triangle operation defined in Definition 6.2.1 for successive values k=1,2,…,n, $d_{i,j}$ becomes equal to the length of the shortest path from i to j according to the arc weights $[c_{i,j}]$.

The arc weights may be negative, but we assume that the input graph contains no negative-weight cycles.

Proof of Theorem 6.3.2

- This proof is given by induction over the index of the executed iteration $k_0 = 0,1,\ldots,n$
- Specifically, we claim that after the execution of the triangle operation for k_0 the entry $d_{i,j}$ gives the length of the shortest path from i to j with intermediate nodes $v \leq k_0$
- Initial step of the induction
  - We commence the induction for $k_0 = 0$
  - Therefore, the initialization of $d_{i,j}$ fulfills this invariant for $k_0 = 0$ since it coincides with the respective weight of a potentially existing direct connection

Proof of Theorem 6.3.2

Induction step k_0-1→k_0

- We assume that the proposition holds for k_0-1 ≥0 and consider $d_{i,j}$
- There are two possibilities

  Case 1: The shortest path from *i* to *j* includes a visit of node k_0

  - Therefore, the length of the shortest path from *i* to *j* that includes only intermediate locations with an index $v \leq k_0$ coincides with the length of the shortest path from *i* to k_0 (integrating only locations with an index $v<k_0$) plus the length of the shortest path from k_0 to *j* (integrating only locations with an index $v<k_0$)
  - This is just the current sum $d_{i,k_0} + d_{k_0,j}$

Proof of Theorem 6.3.2

Case 2: The shortest path from *i* to *j* does not include a visit of node k_0

- In that case the length of the shortest path from *i* to *j* that includes only intermediate locations with an index $v \leq k_0$ coincides with the length of the shortest path from *i* to *j* (integrating only locations with an index $v < k_0$)
- This is just the current value $d_{i,j}$

Hence, in both cases, the triangle operation executed with node k_0 updates $d_{i,j}$ such that it defines the length of the shortest path from *i* to *j* (integrating only locations with an index $v \leq k_0$). This completes the proof. Note that this includes negative arc weights if there is no cycle of negative length.

Floyd-Warshall algorithm

Input: An nxn-matrix $[c_{i,j}]$ with nonnegative entries

Output: An nxn-matrix $[d_{i,j}]$ with $d_{i,j}$ as the shortest distance from *i* to *j* according to the nxn-matrix $[c_{i,j}]$, $e_{i,j}$ gives the vertex that is intermediately visited (reduction was possible)

for all $i \neq j$ **do** $d_{i,j} = c_{i,j}, e_{i,j} = 0$

for *i*=1,…,*n* **do** $d_{i,i} = 0, e_{i,i} = 0$

for *k*=1,…,*n* **do**

  for *i*=1,…,*n*, $i \neq k$ **do**

    for *j*=1,…,*n*, $k \neq j$ **do**

      if $d_{i,j} > d_{i,k} + d_{k,j}$

      then begin

        $d_{i,j} = d_{i,k} + d_{k,j}$

        $e_{i,j} = k$

      end

Path reconstruction

- Based on the found reductions over a vertex *k* that is stored in $e_{i,j}$, we can backtrack the shortest path
- Specifically, if it holds that $e_{i,j} = k$, we know that the path arises by concatenating the paths from node *i* to node *k* and from node *k* to node *j*
- However, if it holds that $e_{i,j} = 0$, the path from node *i* to node *j* is a direct path and does not include any intermediate vertices

Dealing with cycles of negative length

- As mentioned above, the results of Theorem 6.3.2 also apply if we allow some arc weights in the nxn-matrix $[c_{i,j}]$ to become negative as long as there is no cycle of negative length
- However, if there exists such a negative-length cycle, during the calculation of the Floyd-Warshall algorithm, it will cause some $d_{h,h}$ to become negative
  - We consider *h* as the highest-numbered node on the existing cycle, while *k* is the second highest-numbered node on this cycle
  - Therefore, in the iteration that considers an improvement over the intermediate node *k*, the length of this cycle can be computed by $d_{h,h} = d_{h,k} + d_{k,h} < 0$
  - Hence, after this iteration, the entry $d_{h,h}$ is negative and the algorithm terminates since the shortest path is not defined

Complexity

- By analyzing the pseudo code of the complete Floyd-Warshall algorithm, all the loops are of fixed length, and the algorithm requires a total of $n \cdot (n-1)^2$ comparisons
- Hence, we obtain a total complexity of $O(n^3)$

Example – Initialization

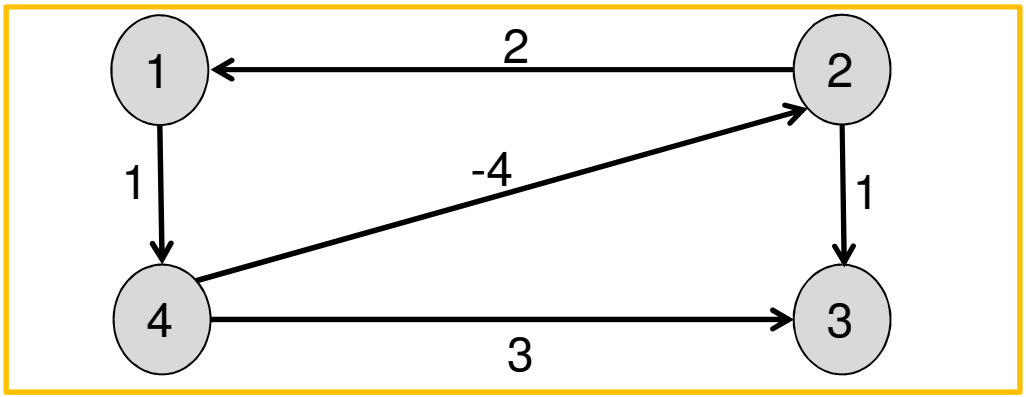

Initialization of the matrices

	$d_{i,j}$			
	1	2	3	4
1	∞	∞	∞	1
2	2	∞	1	∞
3	∞	∞	∞	∞
4	∞	-4	3	∞

	$e_{i,j}$			
	1	2	3	4
1	0	0	0	0
2	0	0	0	0
3	0	0	0	0
4	0	0	0	0

Example – first iteration

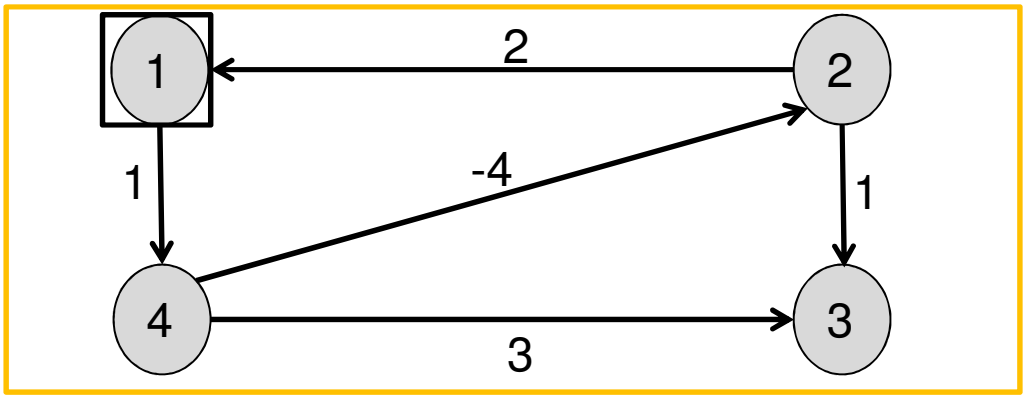

Iteration *k=1*

	$d_{i,j}$			
	1	2	3	4
1	∞	∞	∞	1
2	2	∞	1	(3)
3	∞	∞	∞	∞
4	∞	-4	3	∞

	$e_{i,j}$			
	1	2	3	4
1	0	0	0	0
2	0	0	0	(1)
3	0	0	0	0
4	0	0	0	0

Example – second iteration

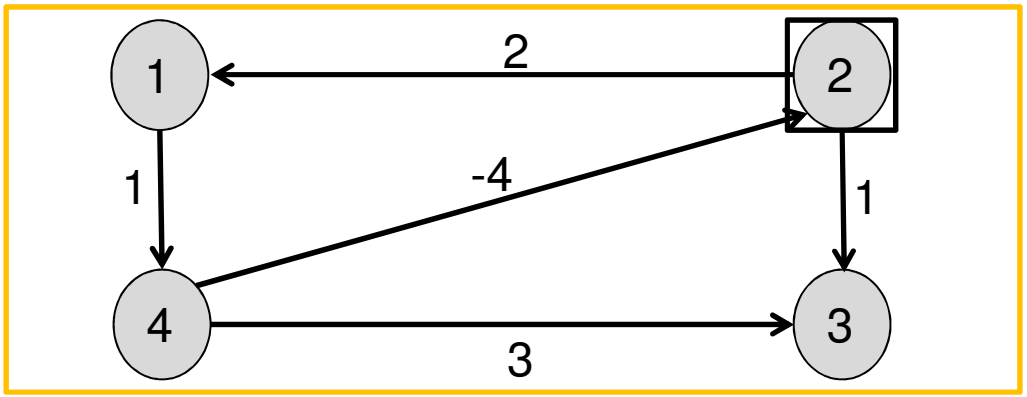

Iteration *k=2*

	$d_{i,j}$			
	1	2	3	4
1	∞	∞	∞	1
2	2	∞	1	3
3	∞	∞	∞	∞
4	(-2)	-4	(-3)	(-1)

	$e_{i,j}$			
	1	2	3	4
1	0	0	0	0
2	0	0	0	1
3	0	0	0	0
4	(2)	0	(2)	(2)

Example – Final results

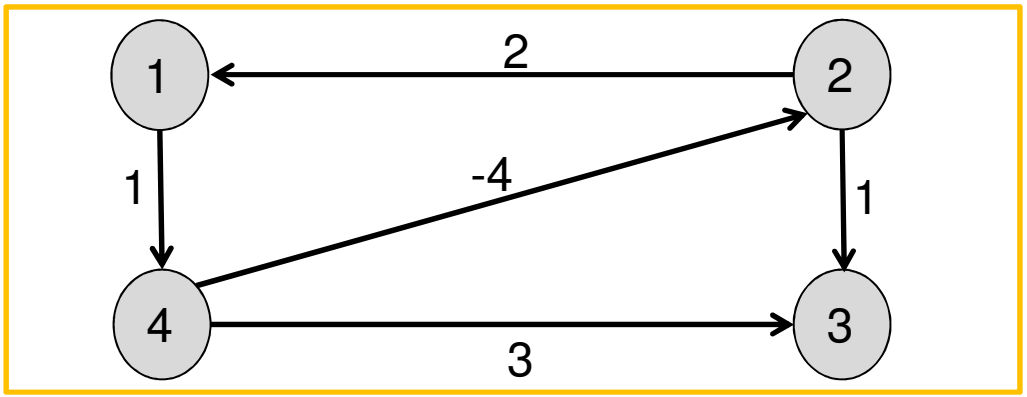

	$d_{i,j}$			
	1	2	3	4
1	∞	∞	∞	1
2	2	∞	1	3
3	∞	∞	∞	∞
4	-2	-4	-3	(-1)

	$e_{i,j}$			
	1	2	3	4
1	0	0	0	0
2	0	0	0	1
3	0	0	0	0
4	2	0	2	2

Cycle of negative length (4-2-1-4) is found and the algorithm terminates

Additional literature to Section 6

- Bazaraa, M.S.; Langley, R.W. (1974): A Dual Shortest Path Algorithm. SIAM Journal of Applied Mathematics Vol. 26(3) pp. 496-501.
- Bellman, R. (1958): On a routing problem. Quarterly of Applied Mathematics, 16(1) pp.87-90.
- Ford, L.R. Jr.; Fulkerson, D.R. (1962): Flows in Networks. Princeton University Press.
- Cormen, T.H.; Leiserson, C.E.; Rivest, R.L.; Stein, C. (2009): Introduction to Algorithms. 3rd edition. The MIT Press.
- Dijkstra, E.W. (1959): A Note on Two Problems in Connexion with Graphs. *Numerische Mathematik* 1, pp. 269-271.

Additional literature to Section 6

- Floyd, R.W. (1962): Algorithm 97: Shortest Path. Communications of the ACM Vol.5(6), p.345.
- Nemhauser, G. L. (1972): A Generalized Permanent Label Setting algorithm for the Shortest Path between Specified Nodes. Journal of Mathematical Analysis and Applications, Vol. 38, pp. 328-334.
- Warshall, S. (1962): A Theorem on Boolean Matrices. Journal of the ACM, Vol.9(1), pp.11-12.